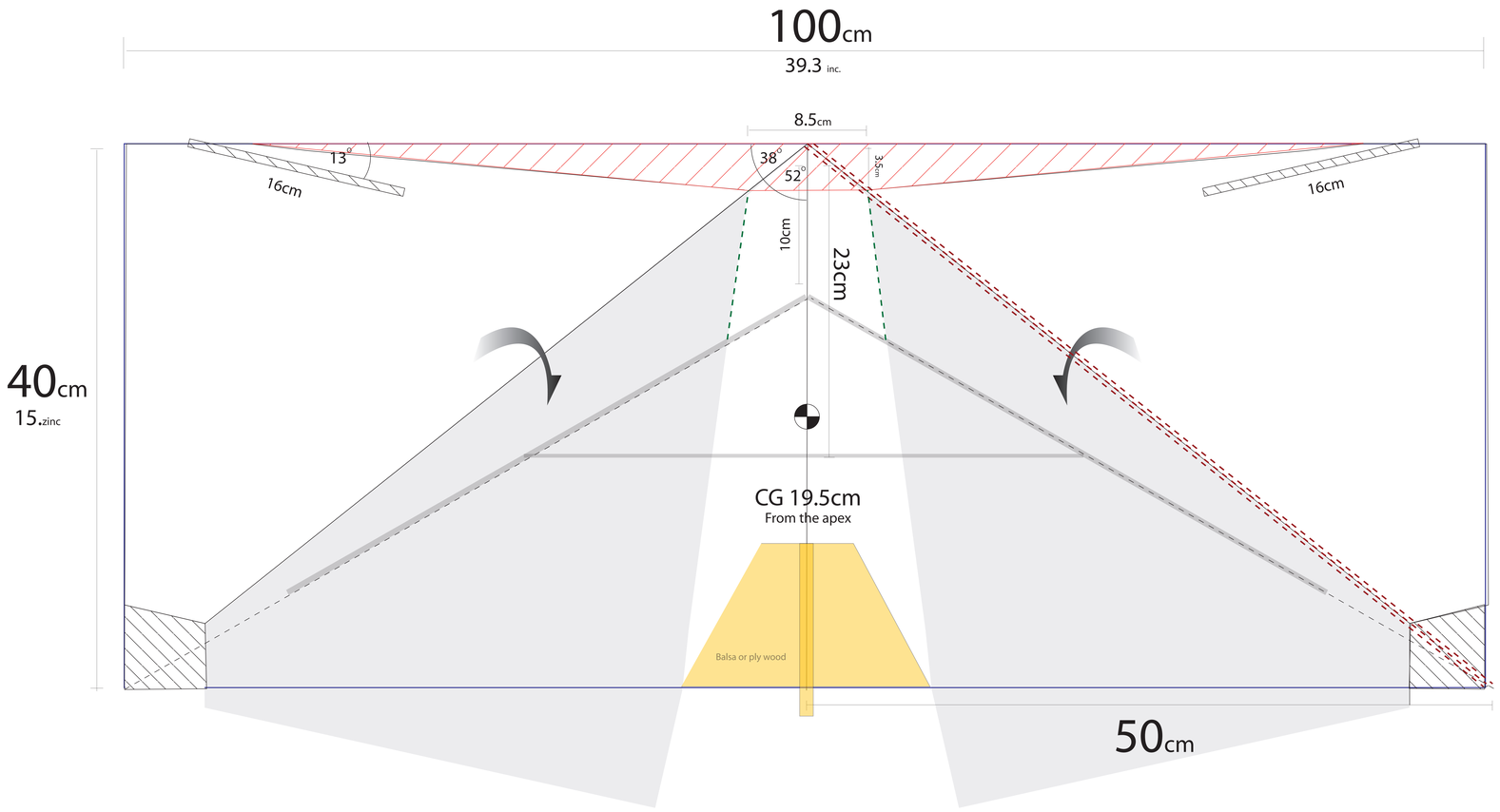

STINGRAY

CUT AFTER FOLD
Some sections are better
Cut after the fold, as the airfoil
Tend to distort their angle

CUT BEFORE FOLD

FOLDED WING

Score Line

Step 8

You will need

* 100cm buy 60cm 3mm foam board
* 3x 40cm x 3mm carbon fiber rods or similar
* Hot glue gun and Glue
* Motor mount and some balsa or ply
* a sharp hobby knife, pen and ruler
* radio gear , 2x Servos and mixer
* some creativity

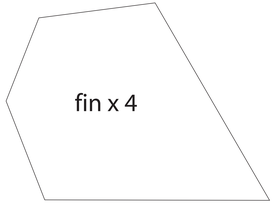

Building The Wing

1. Cut a peace of 3mm foam to 100cm buy 40cm (make sure it's square)

2 Find the center Line and make out the patter with a pen (you wont see this as it all cover up)

3. Turn the fan up side down and mark the center line and fold lines on it,. Run some clear packing tape down the fold lines to help the folding process, don forget to make your CG

4 Turn the foam back over and Cut out the Red hashed section on the plan.

5. Glue in your Carbon rods and motor mount

6. Score the fold lines with a pen, then do another 2 scores about 3mm on ether side of the fold line.

7. run a bead of hot Glue down the score Line and then using a ruler fold the foam and hold it flat. Do the same on the other side and then glue them down on the trading edge.

8. Make Two cuts where the 2 green dotted lines are.

9. Cut out the Black hashed sections on this plans
(the fins slots only need to go through the top layer) and cut out the evelorons and hing with some packing tape

10. Cut out your fins and glue then in. You will need to glue 2 together to make a 6mm fin or if you have 6mm foam use that
(you can make them any shape you like)

Building Fuselage

Install your gear and build your fuse.
Look at the build pics for ideas on this as I don't have plans for the fuse, you can be as creative as you like . Just make sure you preserve some if not all of the symmetrical airfoil. Don't forget the air intakes.

My Power set up

Mega 2400kv in runner on a 6x4 inch prop
1300mha 20c lipo with a 25amp esc

Wing span 78cm or 30inc
Total weight 450g or 14oz
Total static thrust 720g or 25oz
Power to weight ratio 1.6 to 1 ... zooom!

Launching the bird

Since there is no feathering on the wing you may need to trim the ailerons up a 10%, hold it at a 30% angle apply about 40% power and give a toss.