DWG NO	SH
TRW 08162010	1

-	00	REV LTR	REV STATUS OF SHEETS
2	1	SHEET NO.	

REVISION HISTORY

ZONE	REV	DESCRIPTION	DATE	APPROVED
	00	RELEASED PER ECO		

Pro/E MAINTAINED. CHANGES SHALL BE INCORPORATED BY THE DESIGN ACTIVITY.

1. MAKE FROM NYLON

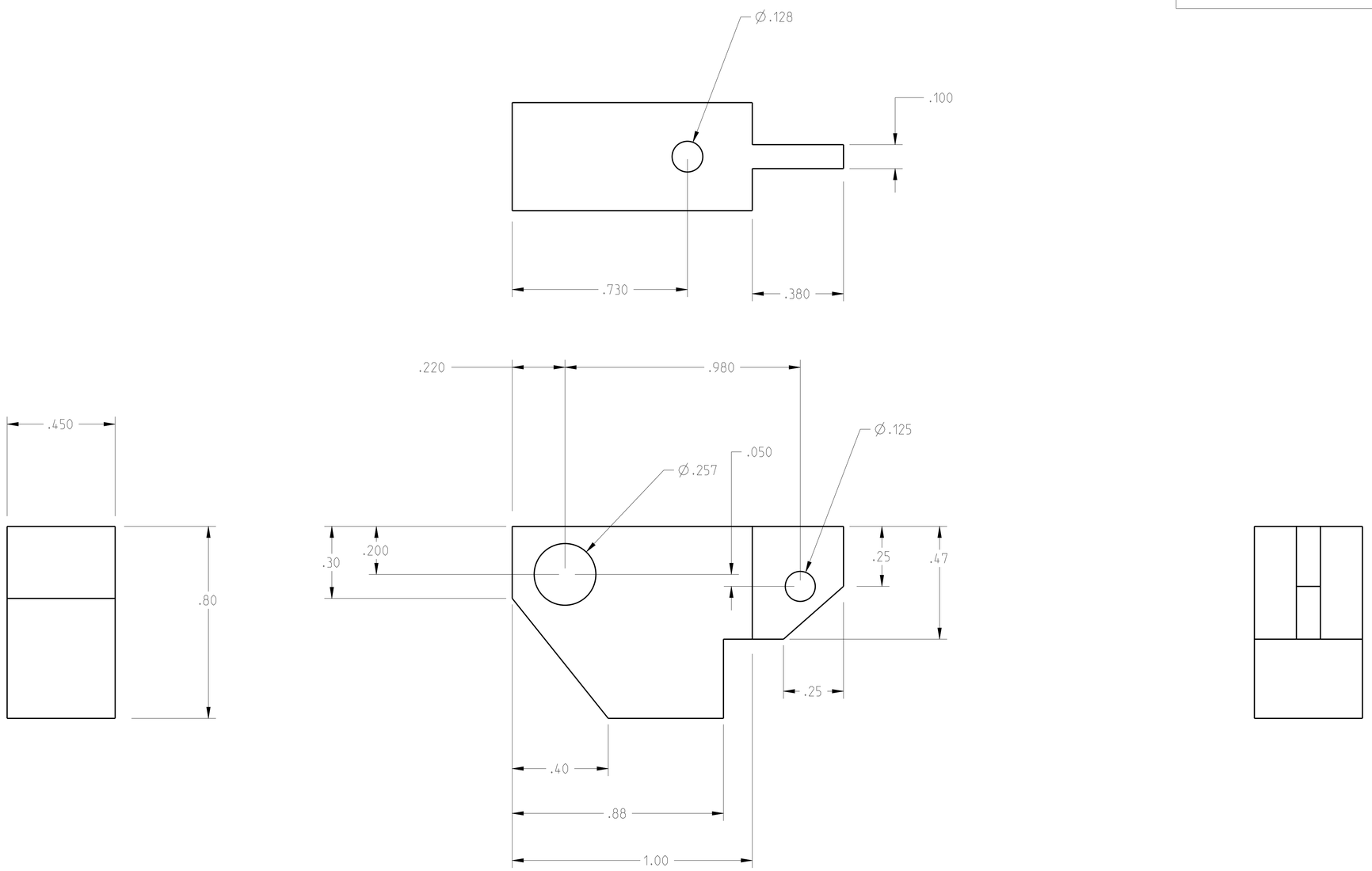

QTY	FIND NO	DAI	PART OR IDENTIFYING NUMBER	NOMENCLATURE OR DESCRIPTION	DRAWING OR SPECIFICATION NO	NOTES
-1				PARTS LIST		

NEXT ASSY	USED ON
APPLICATION	

CONTRACT NO

DWN	T.R. WOLF	20080816
CHK		
ENGR		
ENGR		
APVD		
DSGN	T.R. WOLF	08162020

TITLE

BLOCK, PIVOT

SIZE	CAGE CODE	DRAWING NO
D		TRW 08162010

SCALE: 4.000 SHEET 1 OF 1

MODEL:	BLOCK_PIVOT	00	-
DRAWING:	TRW08162010	00	-
	FILE NAME		REVISION VERSION

DWG NO TRW 08162010 SH 1