A 16-3/4" span SCALE model for Kalper Power.

S. E. 5a

Designed by

RAY BOOTH

Copyright of

The Aeromodeller Plans Service

The Aerodrome, Stanbridge, Nr Leighton Buzzard, Beds

All wood balsa unless otherwise stated

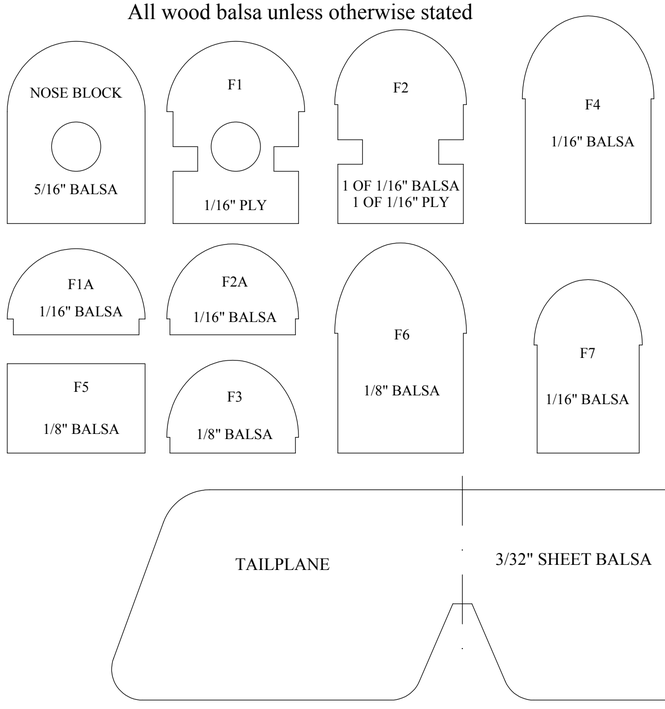

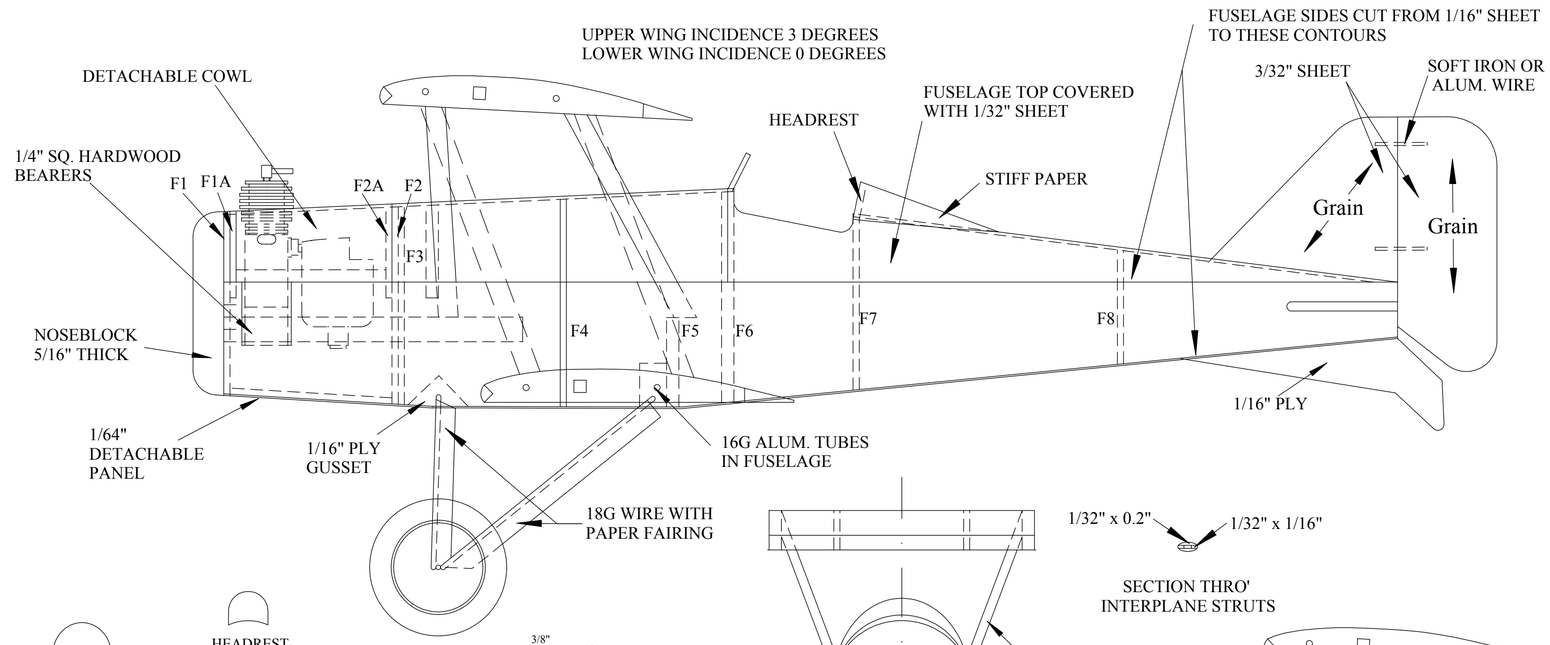

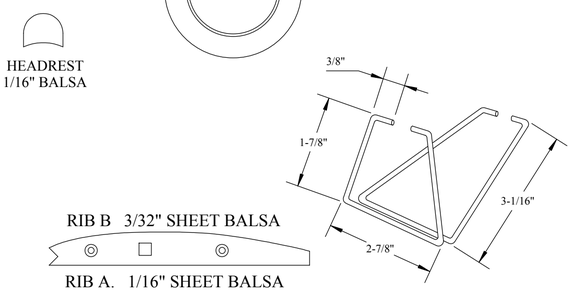

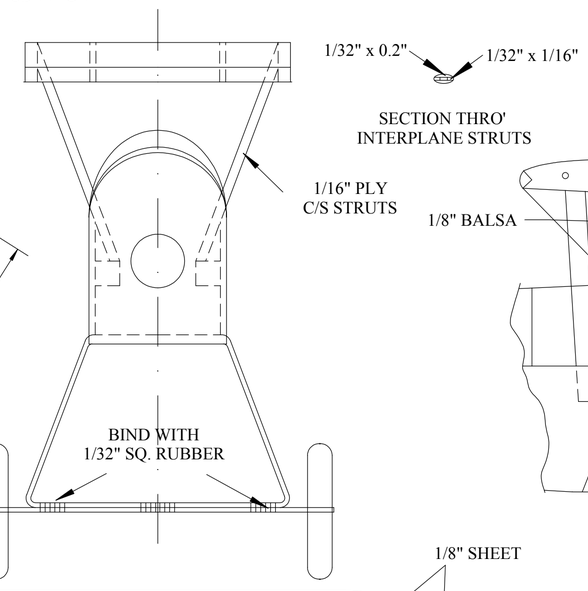

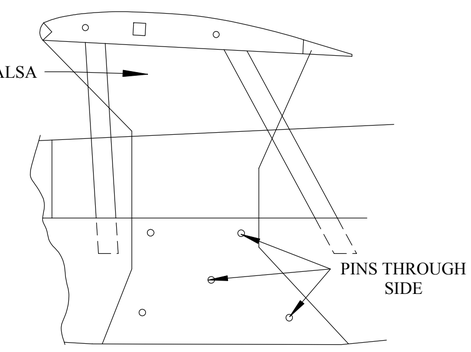

UPPER CENTRE SECTION
WING JIG

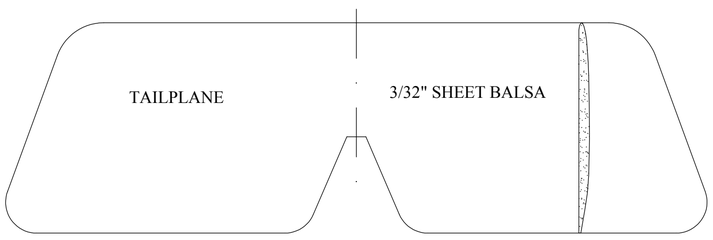

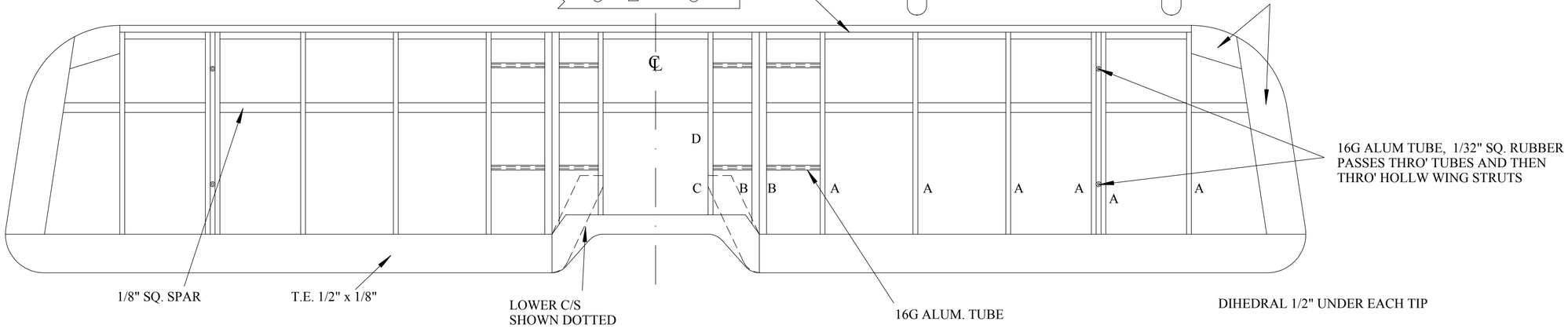

FSP 444