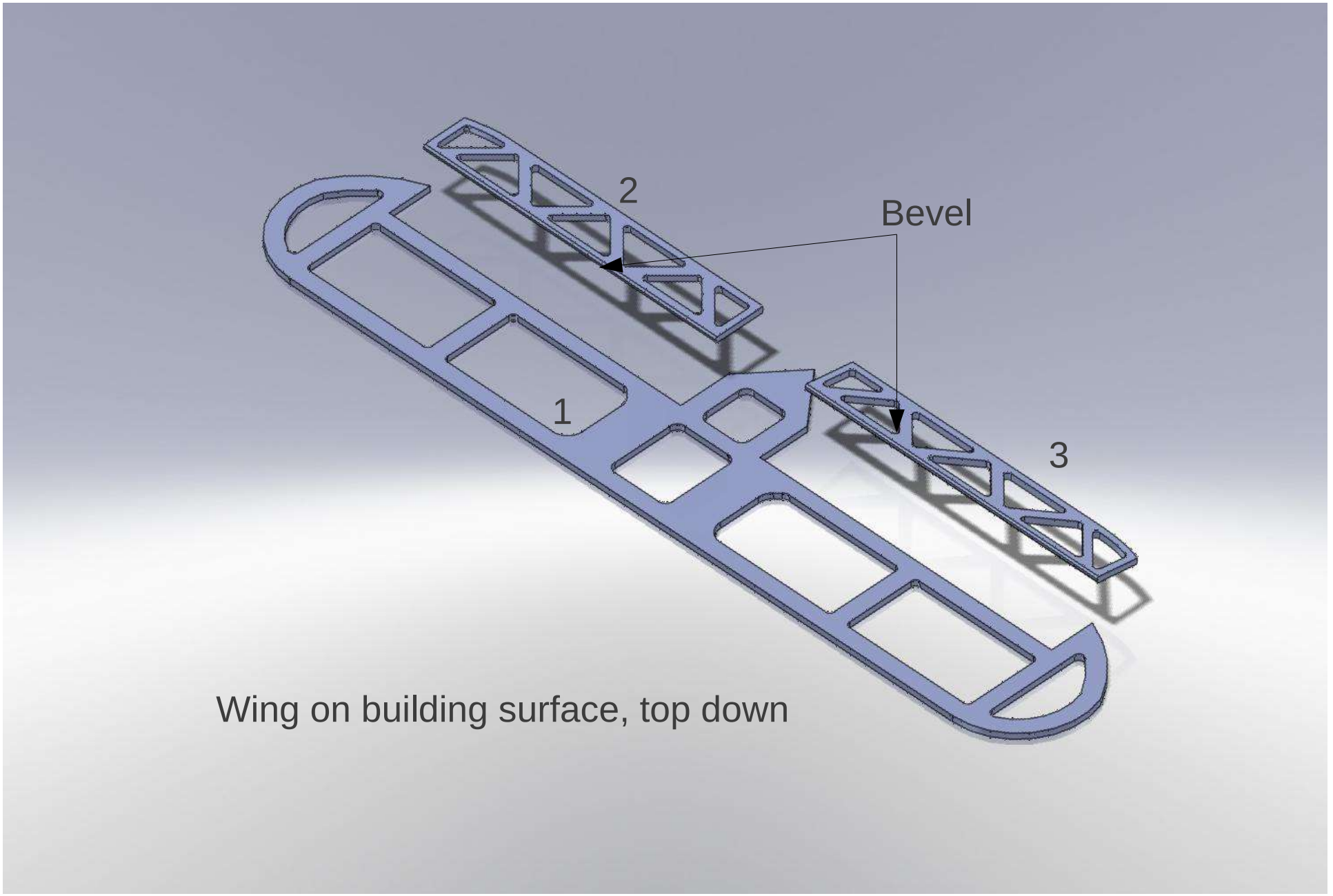

Wing on building surface, top down

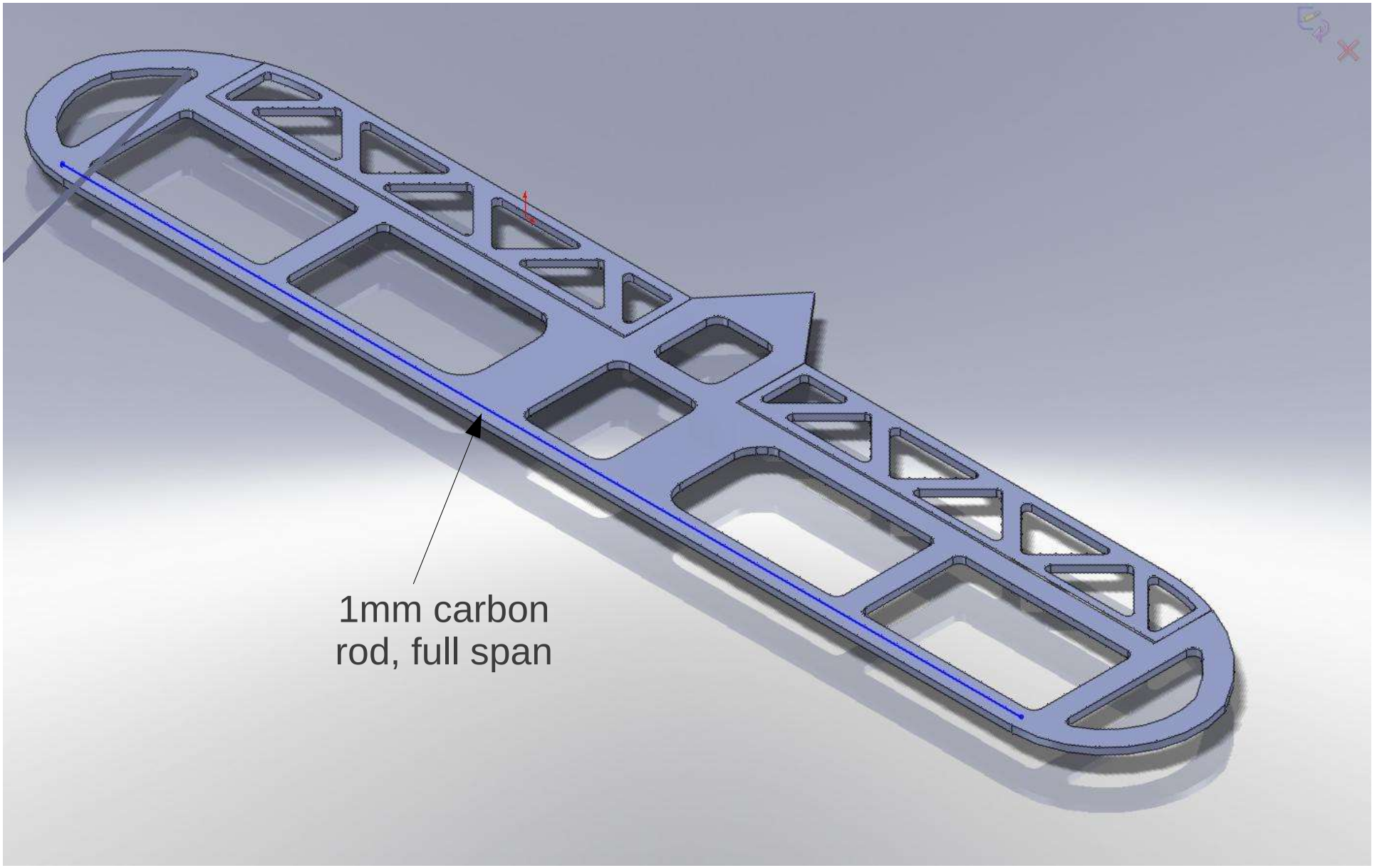
1mm carbon
rod, full span

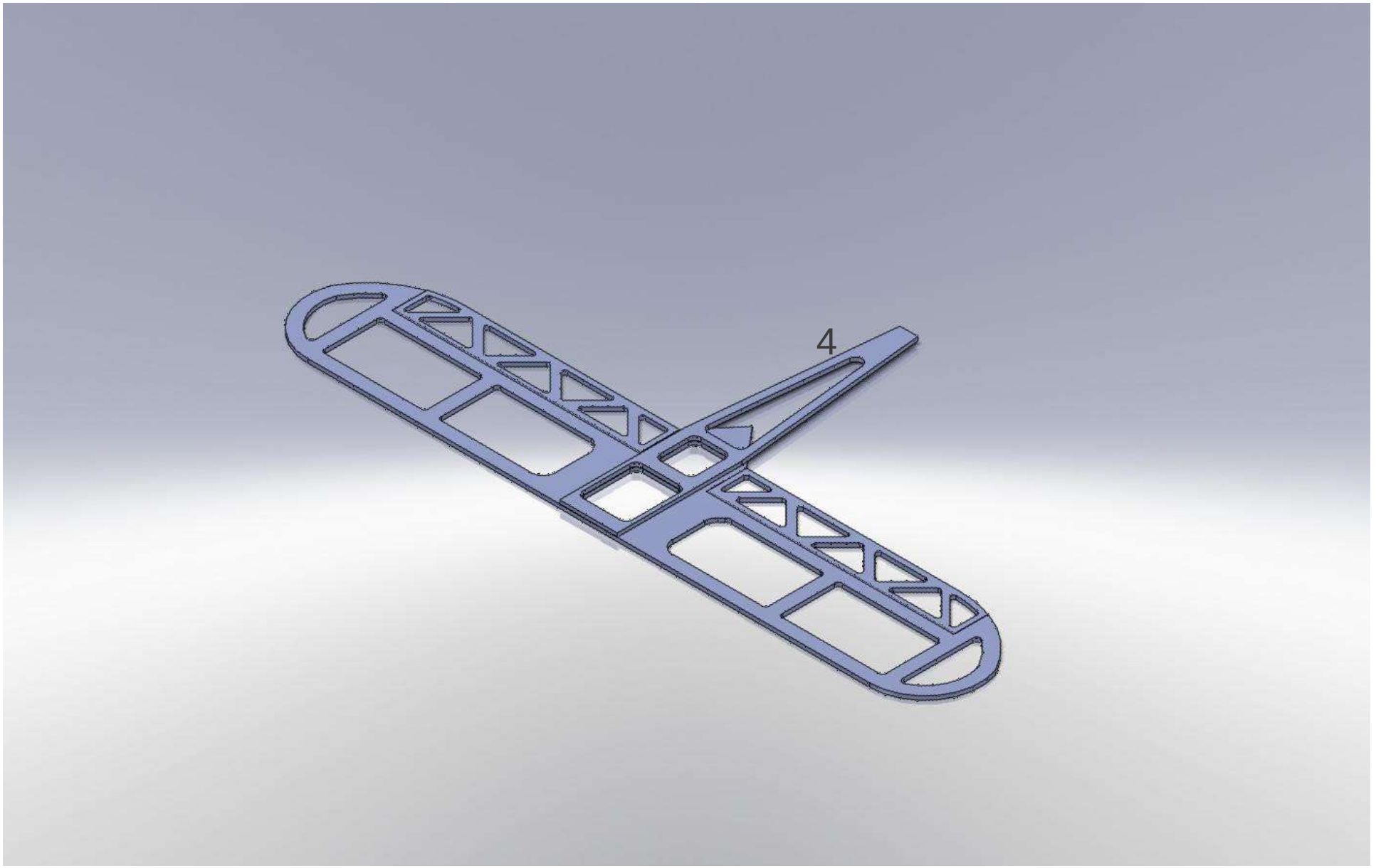
4

aqda

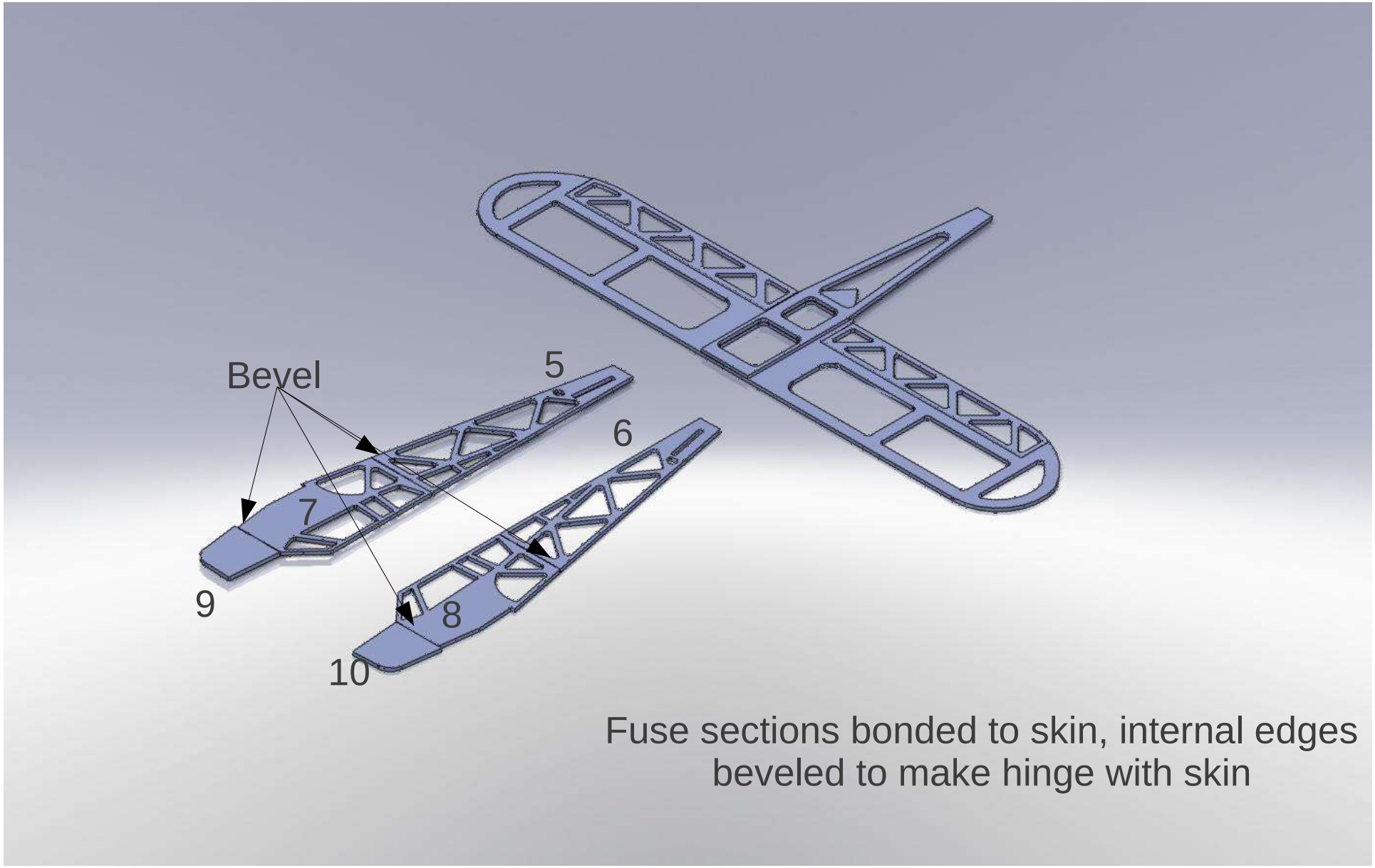

Fuse sections bonded to skin, internal edges beveled to make hinge with skin

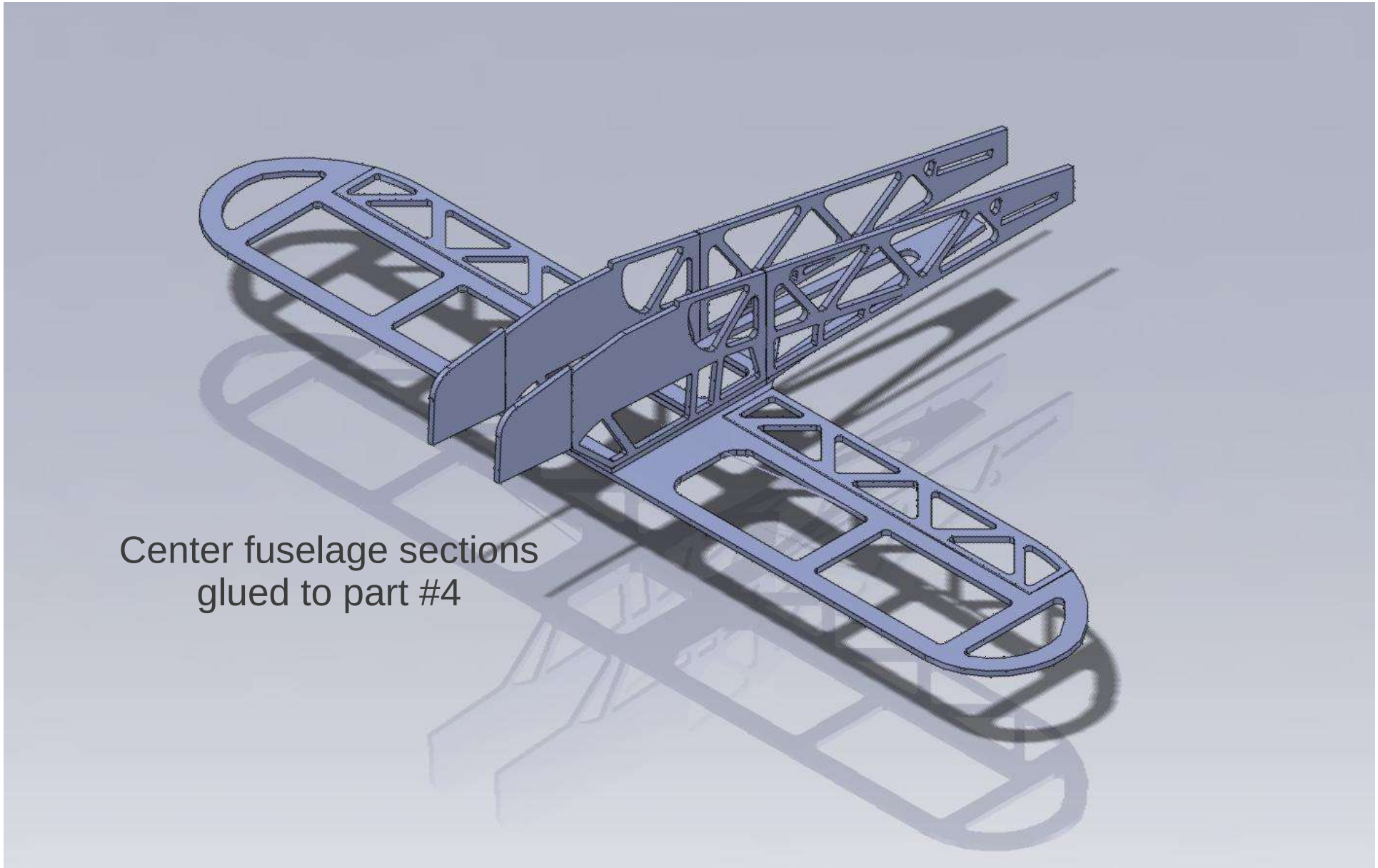
Center fuselage sections
glued to part #4

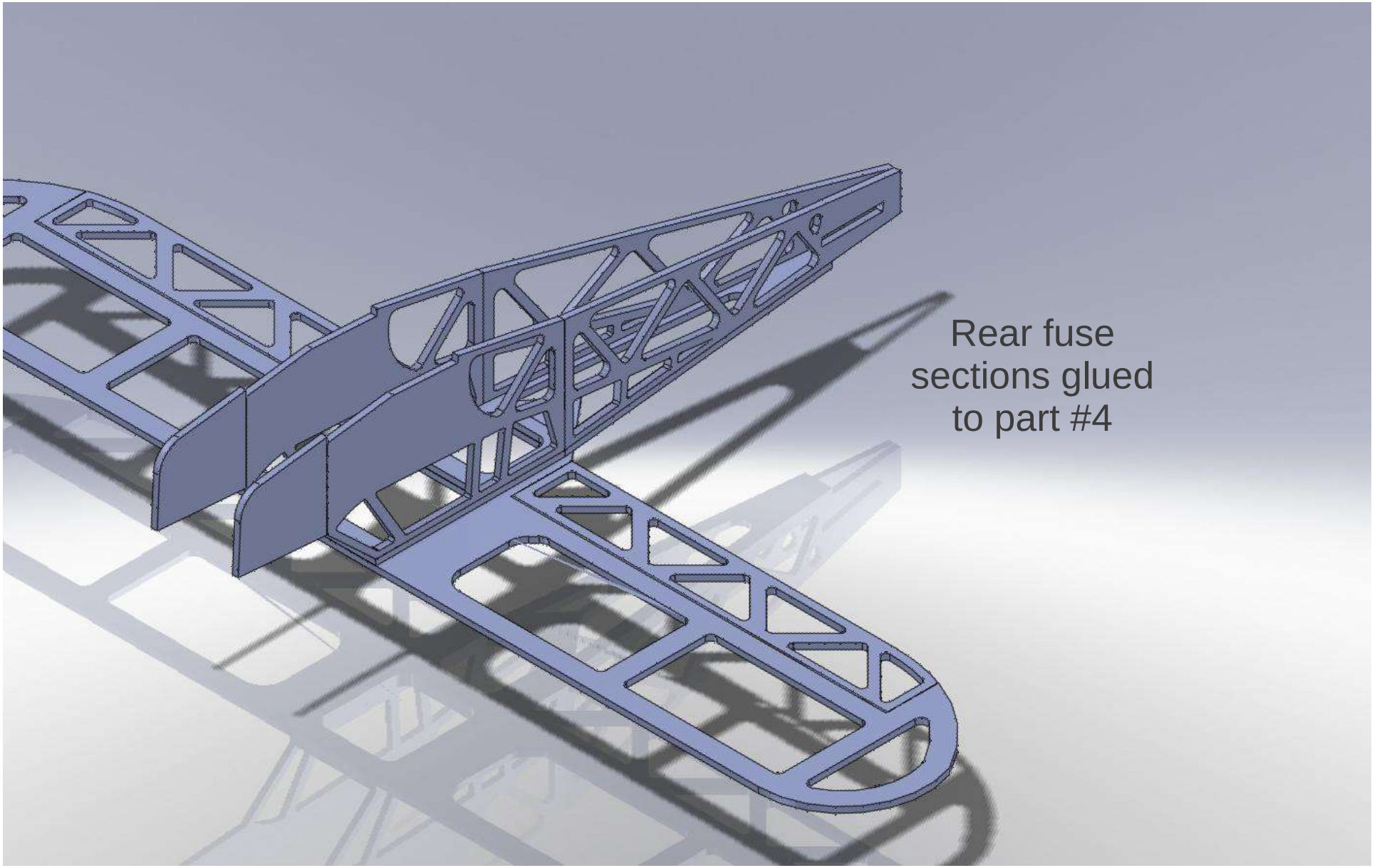
Rear fuse
sections glued
to part #4

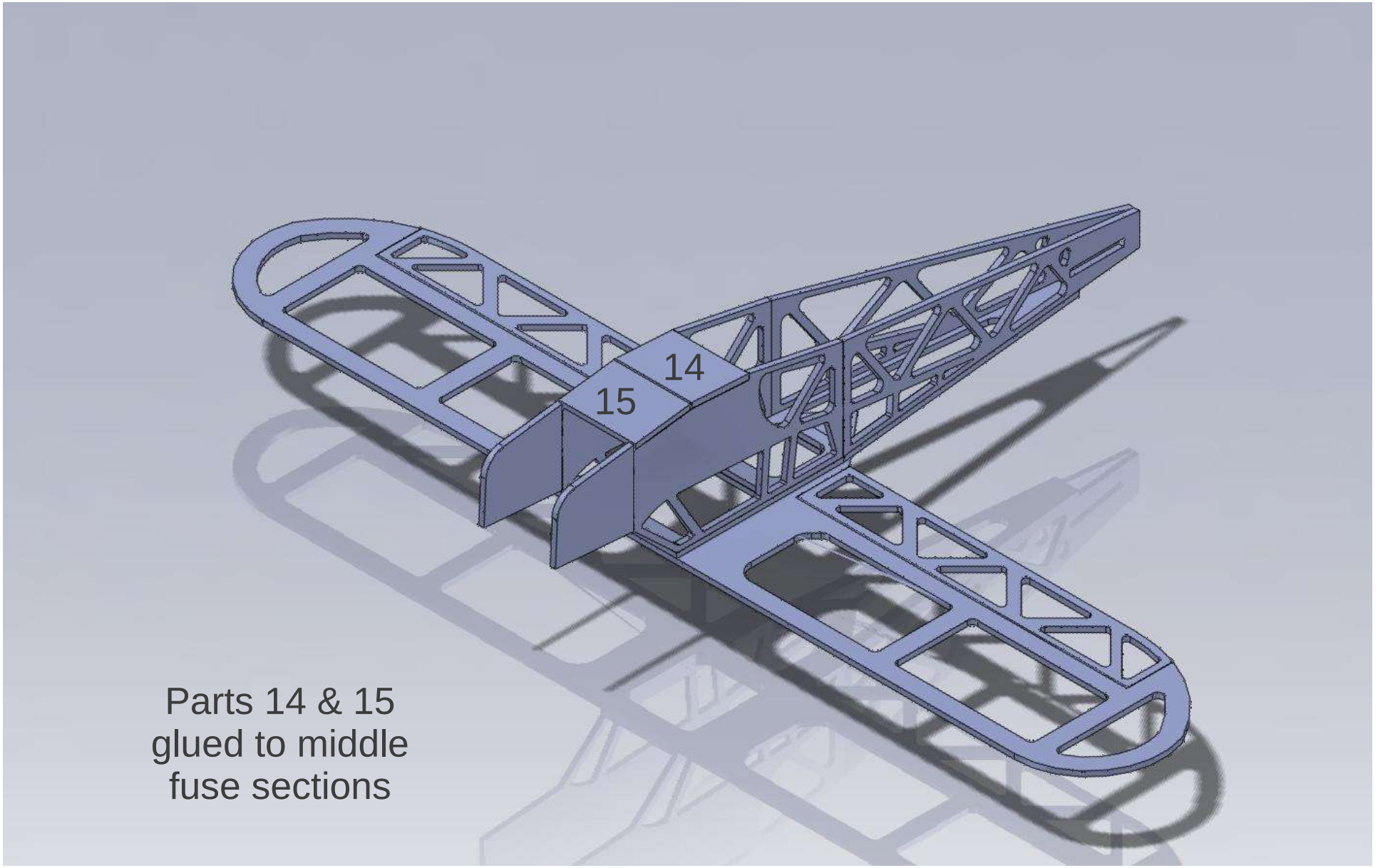

Parts 14 & 15
glued to middle
fuse sections

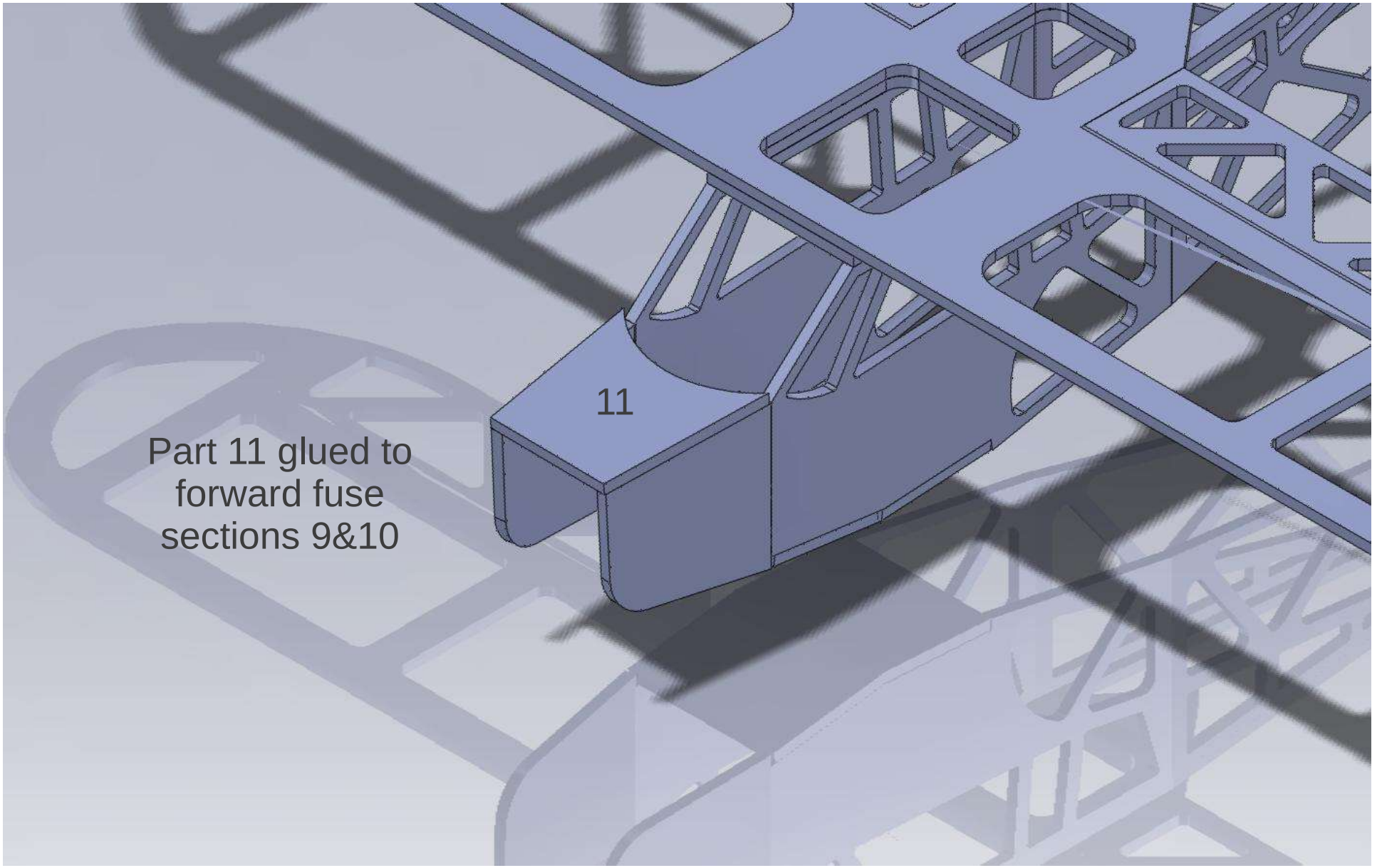

Part 11 glued to forward fuse sections 9&10

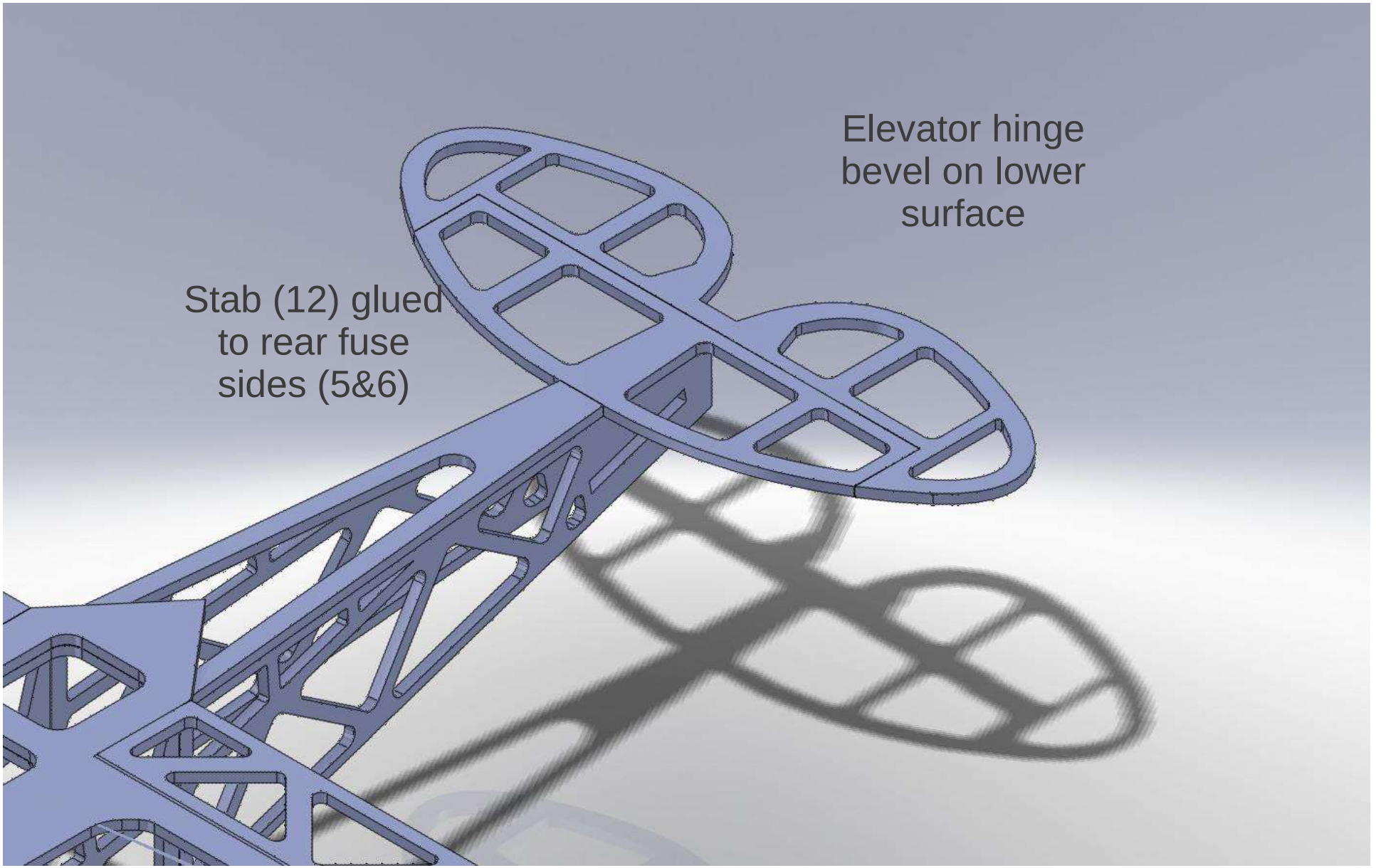
Elevator hinge bevel on lower surface
Stab (12) glued to rear fuse sides (5&6)

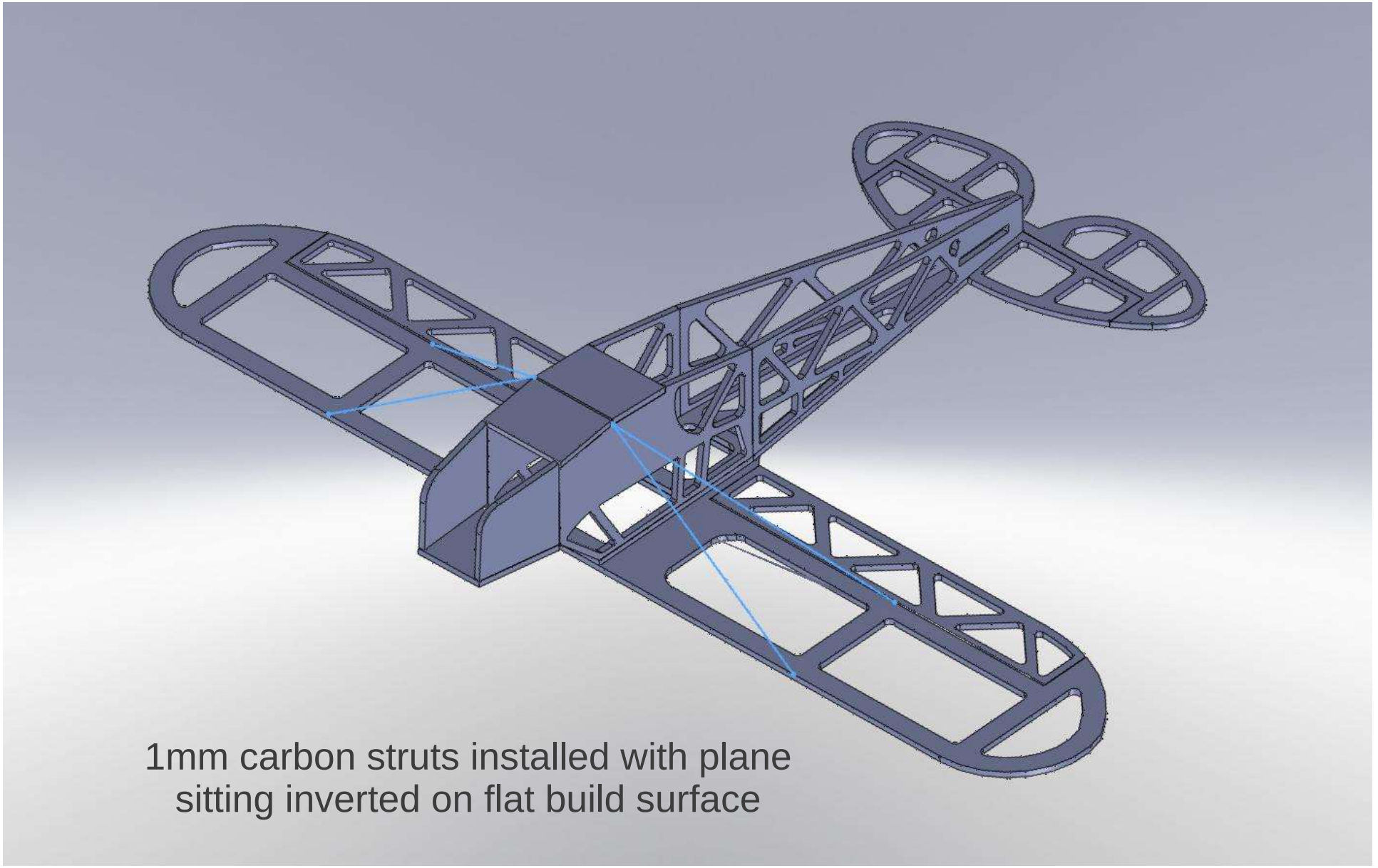

1mm carbon struts installed with plane sitting inverted on flat build surface

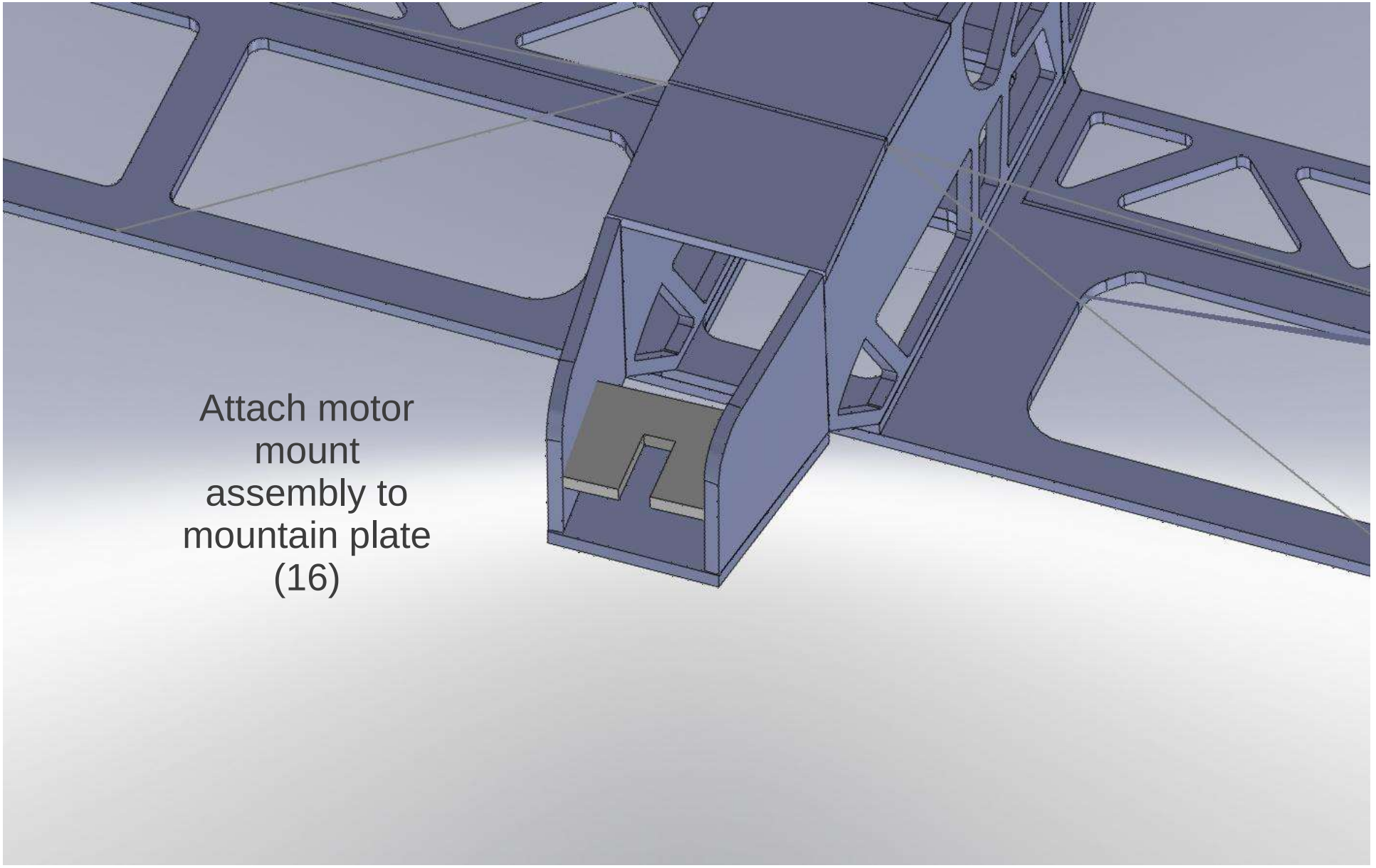
Attach motor mount assembly to mountain plate (16)

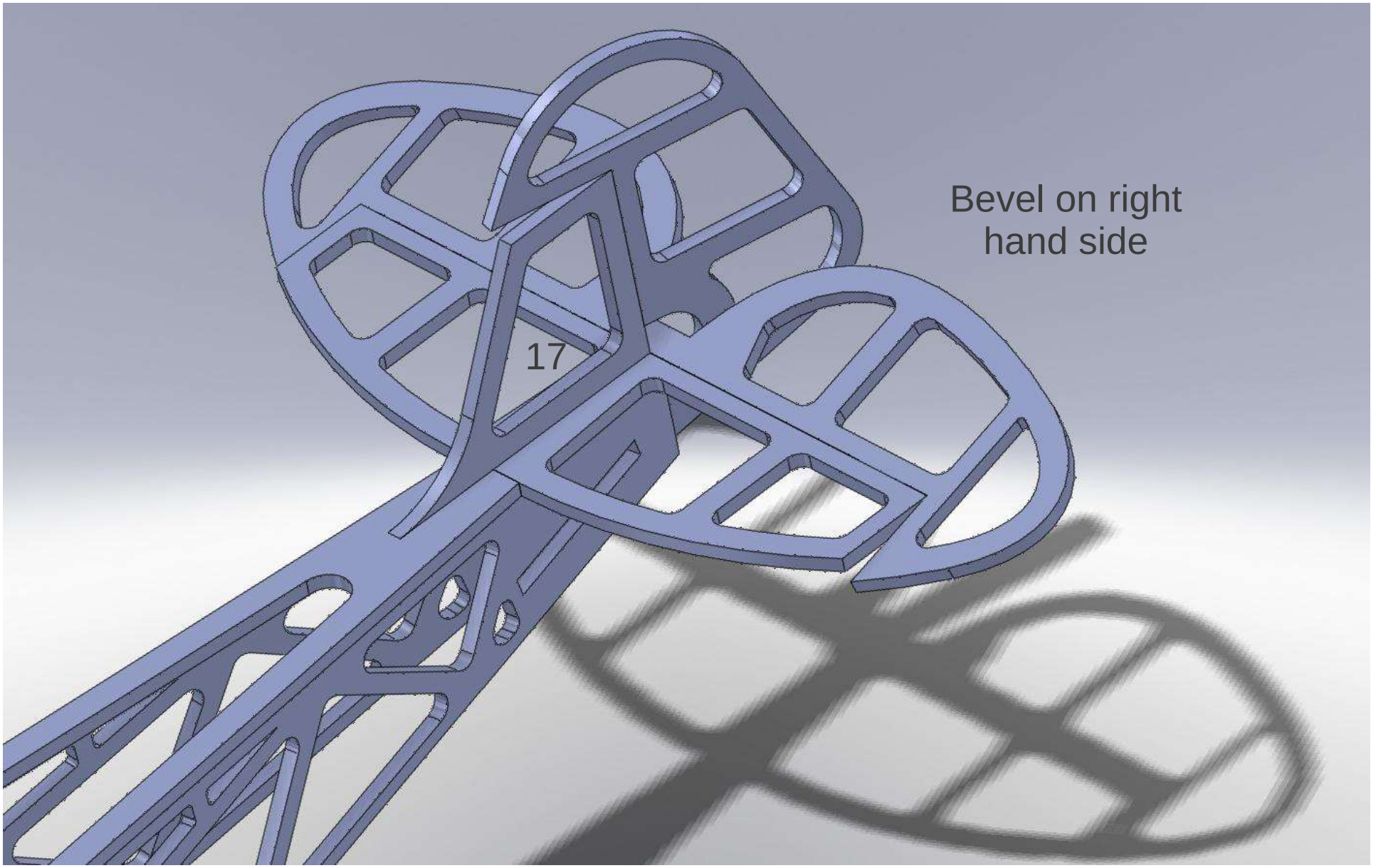
Bevel on right
hand side
17