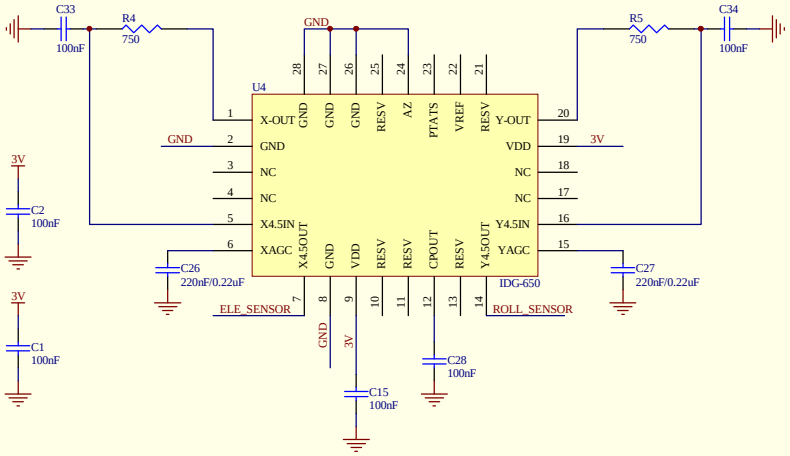

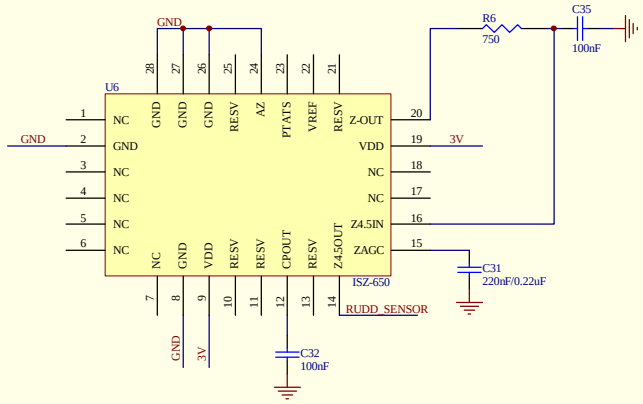

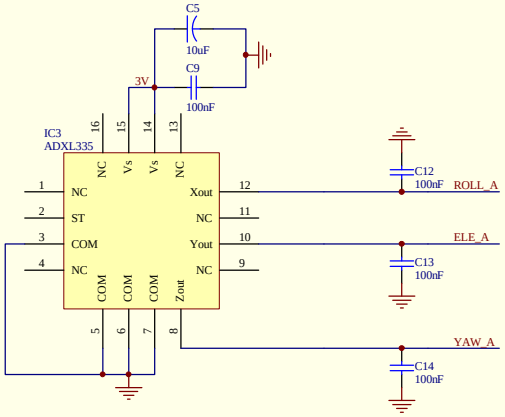

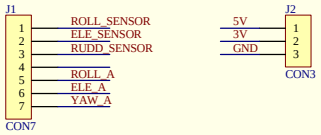

Title		
Size A3	Number	Revision
Date: 30-Nov-2011	Sheet of	
File: C:\Documents and Settings\Administrator\桌面\KKPLUS_ALL\KKPlus_MEMS_Shield.KK	Drawn by:	