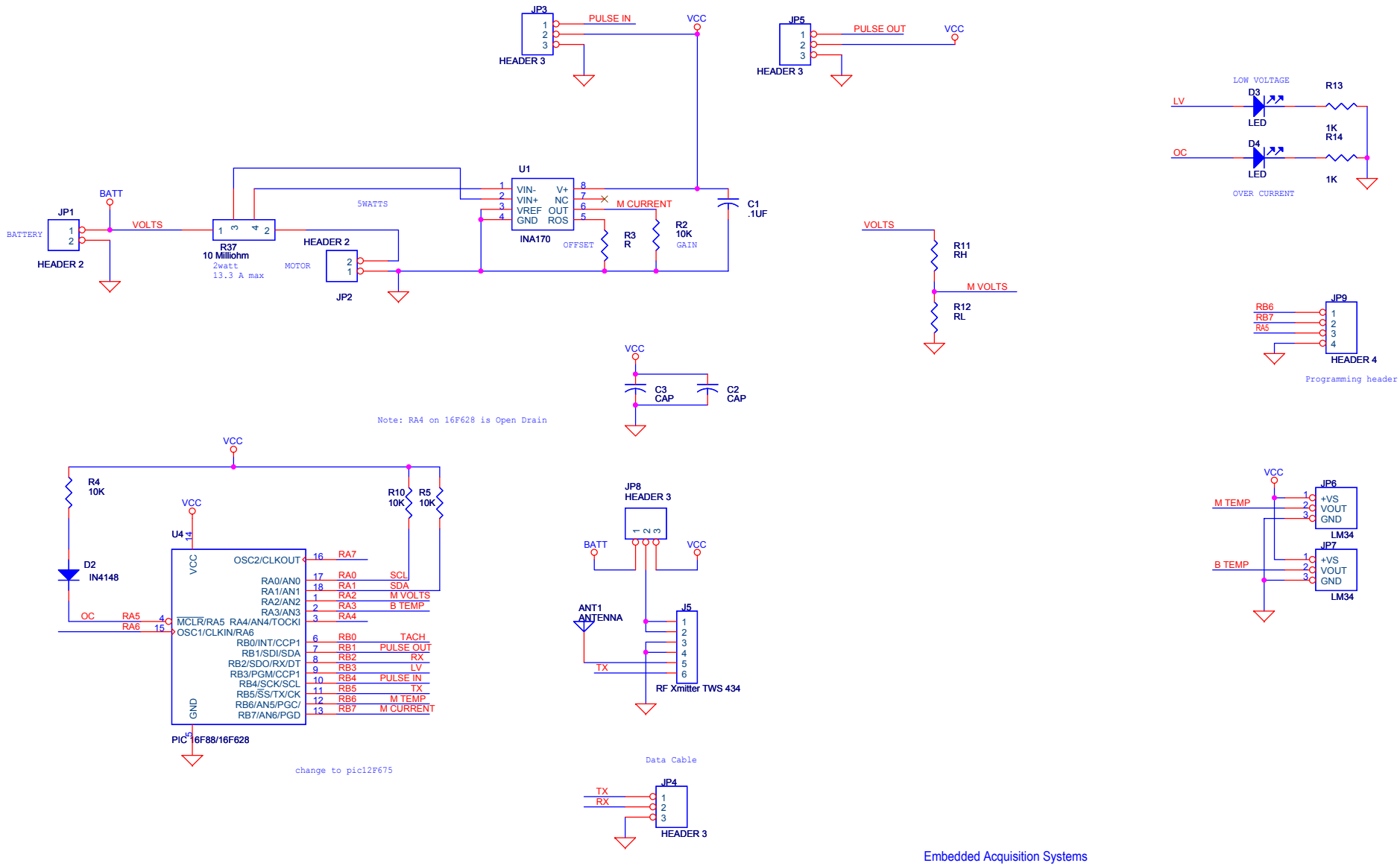

Embedded Acquisition Systems
2571 Cobden Dr.
Sterling Heights, MI 48310
WEB http://www.embeddedtronics.com
EMAIL sales@embeddedtronics.com
Copyright 2007

Title	Inflight Light Datalogger (shunt)	
Size B	Document Number <Doc>	Rev A
Date: Thursday, April 19, 2007	Sheet 1 of 1	